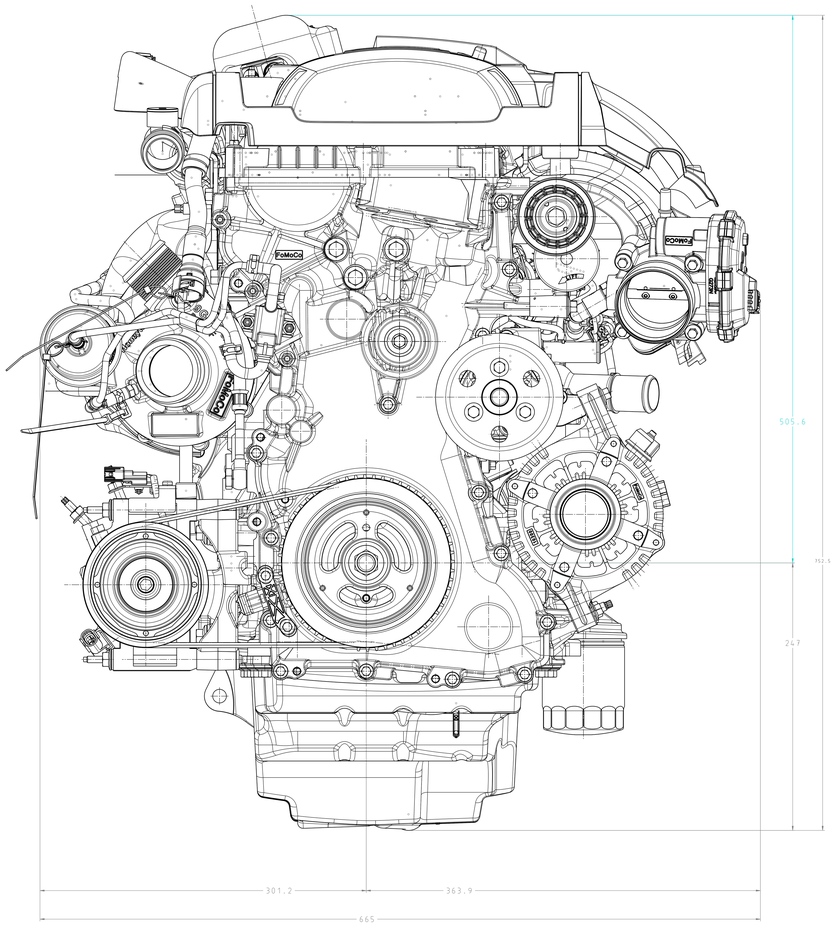

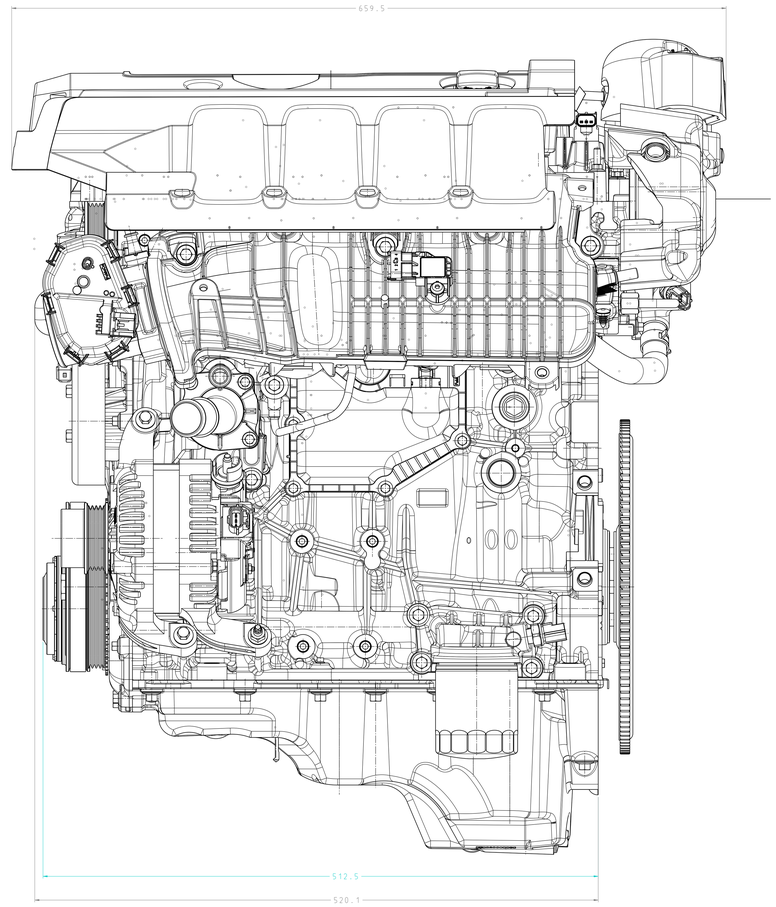

2.3L S550 MUSTANG PACKAGE